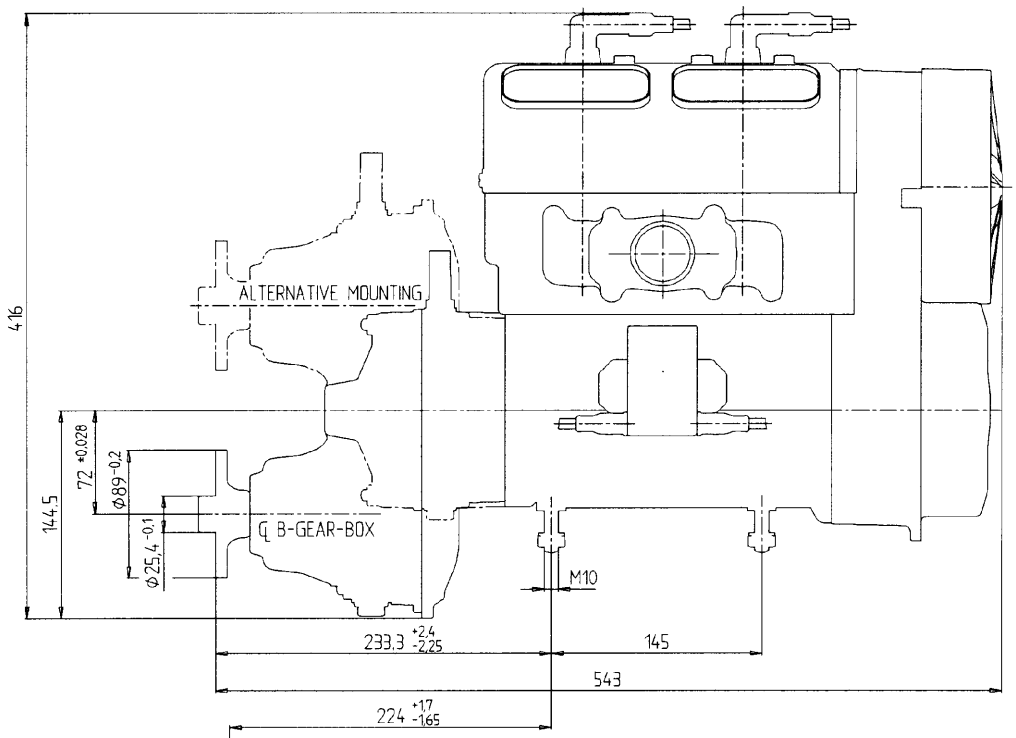

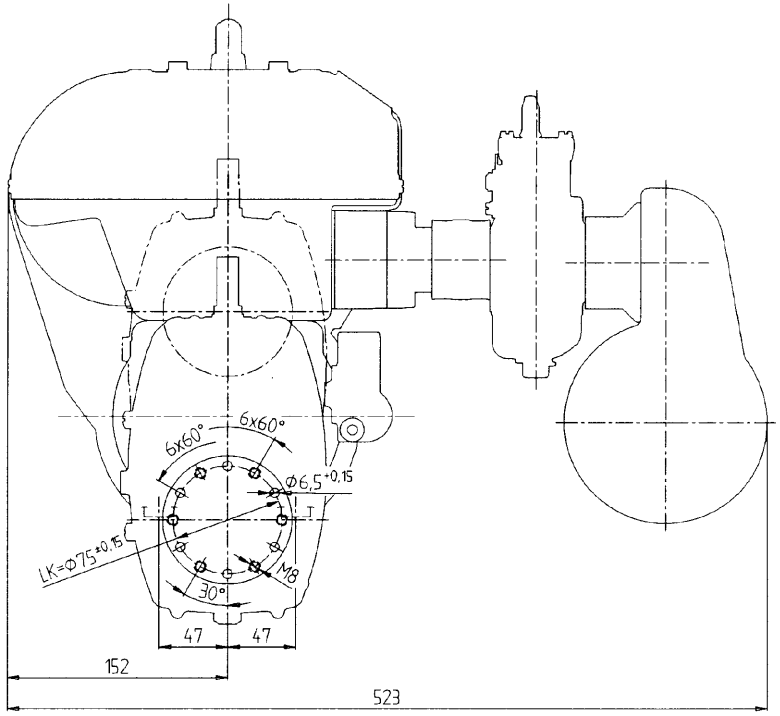

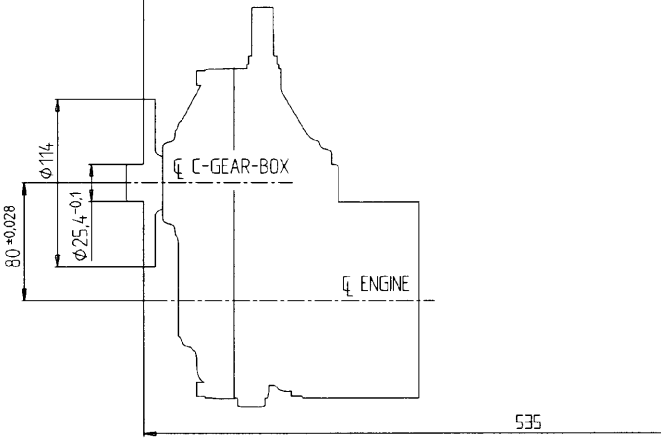

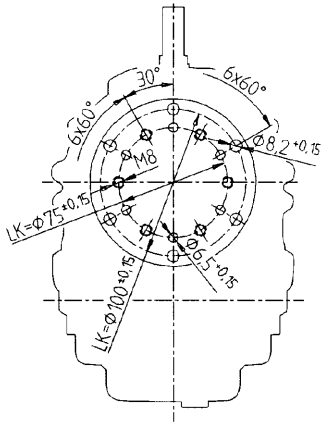

OUTLINE - DIMENSIONS - DRAWING

ROTAX TYPE 447 UL ROTAX MOD.91 ROTAX PROD.91
BOMBARDIER-ROTAX GMBH GUNSKIRCHEN AUSTRIA AUG.91
EUROPEAN PROJECTION
SUBJECT TO CHANGE WITHOUT NOTICE